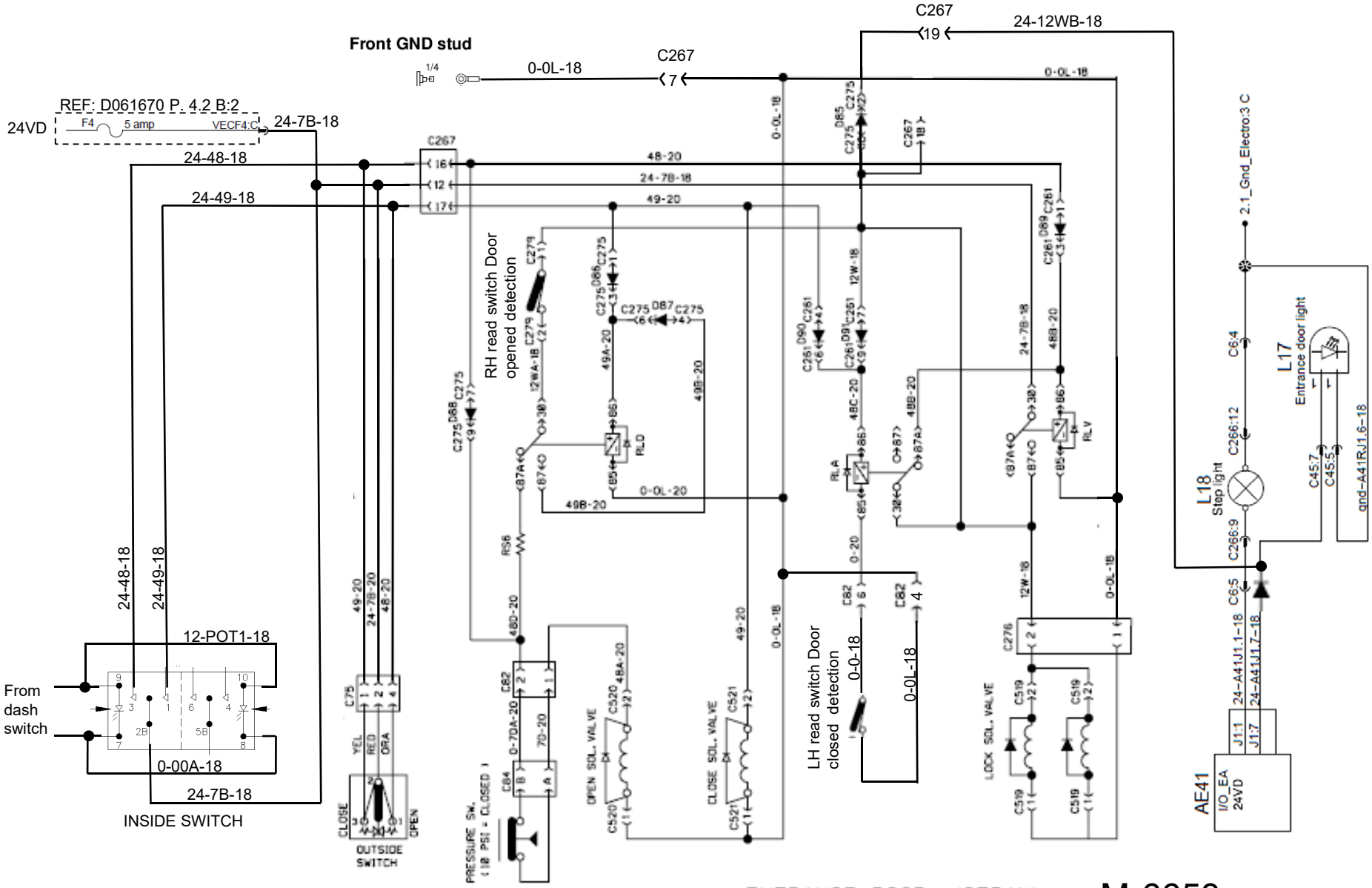

ENTRANCE DOOR (SEDAN)

M-6653

PREVOST